Pipeline & Gas Journal

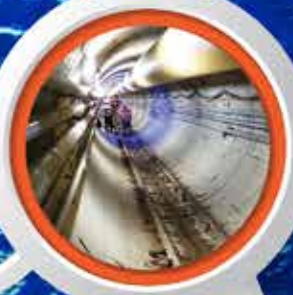

15 International Offshore & Gulf of Mexico Report

P&GJ's 2015 International Offshore and Gulf of Mexico Report provides an over view of the forthcoming Offshore Technology Conference (OTC) that is held annually in Houston and news on key industry projects and activities aimed at profitable oil, gas and pipeline developments.

2015 Offshore Technology Conference Highlights

By **Rita Tubb,** Executive Editor

The Offshore Technology Conference 2015 (OTC 2015) set for May 4-7 at NRG Park in Houston will bring together more than 100,000 industry leaders and buyers from 130-plus countries, all of whom want to explore how technology, best practices and emerging trends can provide the energy needed for the world.

The conference will feature a top technical program sponsored by 14 industry organizations and societies. The technical program covers a wide range of topics and offers key insights by global experts on technological advances, safety and environmentally focused solutions, and economic and regulatory effects.

The event's exhibition features leading manufacturers from around the world who will staff 2,568 exhibits featuring all phases of offshore oil and gas operations.

The day before the conference, OTC will host the fifth annual OTC dinner at NRG Stadium. The event recognizes industry achievements, raises funds for a worthy cause, and provides an excellent opportunity for industry leaders to network with colleagues. Along with recognizing individual and company achievement award recipients, proceeds from the dinner will go to the Energy Institute High School.

The Independent Petroleum Association of America (IPAA) and the Petroleum Equipment & Services Association (PESA) partnered with the Houston Independent School District to create the first Energy Institute High School in the United States. Opened in August 2013, the school is a new magnet school for grades ninth through twelfth. Its students work within one of the three pathways — geosciences, energy alternatives or offshore technology, with a core curriculum focused on science, technology, engineering and mathematics.

Award Recipients

Elmer "Bud" Danenberger III will be the recipient of the OTC Distinguished Achievement Award for his contributions to offshore safety and environmental protection. Danenberger spent 38 years with the U.S. Department of the Interior in the offshore oil and gas program.

He initiated the MMS industry awards program and co-authored legislation leading

Elmer "Bud" Danenberger

to offshore renewable energy and alternate use authority. Danenberger approved and monitored the first exploratory drilling in the North Atlantic and the first California development north of Point Conception. He also wrote pioneering papers on the causes and occurrence rates for OCS oil spills and blowouts. These papers are still widely referenced.

The Heritage Award will be presented to Ray R. Ayers in recognition of his 50-plus years of contributions to offshore research and development. He formed joint-industry programs at Shell and performed research and development work with the Pipeline Research Council International, DeepStar, the Bureau of Safety and Environmental Enforcement and Research Partnerships to Secure Energy for America.


Ray Ayers

Early in his career, Ayers led a number of significant developments, including the testing of techniques to measure and arrest buckles in offshore pipelines. He also performed the first wave tank testing of oil spill clean-up on water, which formed the basis for the design of current-day booms and skimmers. Ayers has been awarded 49 patents and has received numerous other technical and leadership awards.

The Distinguished Achievement Award for Companies, Organizations, and Institutions will recognize Petrobras for its pre-salt development and successful implementation of ultra-deepwater solutions and setting of new water depth records.

Petrobras increased its efforts in technology development to exploit this hard-to-access resource, in waters 7,200 feet deep. By the end of 2014, Petrobras was producing more than 700,000 bpd in the pre-salt layer of the Campos and Santos basins.

Spotlight on New Technology

Each year, OTC recognizes innovative with the Spotlight on New Technology Award. This program is exclusively for OTC exhibitors and showcases the latest advancements. This year's winners will be announced May 4 during presentation of the awards.

OTC Night at the Ballpark

Attendees are invited to come out to Minute Maid Park on May 5 to watch the Houston Astros play the Texas Rangers. Contact Christian Liebenow at (713) 259-8315.

Appreciation Concert

On May 6, attendees can dance the night away at the OTC Appreciation Concert. The event features musical entertainment, food and drinks. Providing live entertainment will be 80s cover band The Spazmatics.

The event is free and open to all OTC attendees.

University R&D Showcase

The OTC University R&D Showcase on May 7 allows universities to share their current and planned R&D projects with attendees. The program offers an opportunity to get first-hand feedback and possible interest in collaborations.

Breakfasts, Luncheons

OTC will host 29 breakfasts and luncheons during the event that showcases presentations from key executive and technical experts. Tickets are $50 each and should be purchased early since seating is limited. All special event tickets must be purchased separately.

Registration

OTC registration fees include admittance to the technical session and exhibits. Students with valid IDs can obtain a complimentary one-day registration. Members in any of the OTC sponsoring, endorsing, supporting or invited organizations can get a four-day registration for $180, while non-member registration is $280. A one-day registration for members is $140; non-member registration is $240. ***P&GJ***

Trenchless Technologies Solve Marine Crossing Challenge

By **V. Nisii, G. Tassinari, A. Testa, S. Morgante** and ***F. Olivi. SAIPEM***

Based in Queensland, Australia, the GLNG project involves gas field developments in south-east Queensland and an LNG plant on Curtis Island, near Gladstone.

Sanctioned in January 2011, GLNG includes the development of coal seam gas (CSG) resources in the Bowen and Surat Basins, construction of a 420-km underground gas transmission pipeline to Gladstone, and two LNG trains with a combined nameplate capacity of 7.8 mtpa on Curtis Island.

The project has an estimated gross capital cost of US$18.5 billion and is on track for first LNG in the second half of 2015.

The project is being developed by a joint venture made up of Santos, Total, Petronas and Kogas. The contract involving engineering, procurement and construction of the 420-km, 42-inch gas transmission pipeline and fiber optic communications running from Fairview to Curtis Island was awarded in 2011 to Saipem Australia.

The last section of the GLNG pipeline route crosses a 4.5-km marine channel including a wide mudflat tidal plain called The Narrows before reaching Curtis Island LNG plant.

The Narrows is a sensitive marine environmental area for the near-shore native flora and fauna. Furthermore, the mudflat intertidal zone is also characterized by the presence of shallow acid sulfate soil layers. This particular soil, if exposed during excavation, could increase the acidity of the surrounding environment with severe consequences on the local ecosystem.

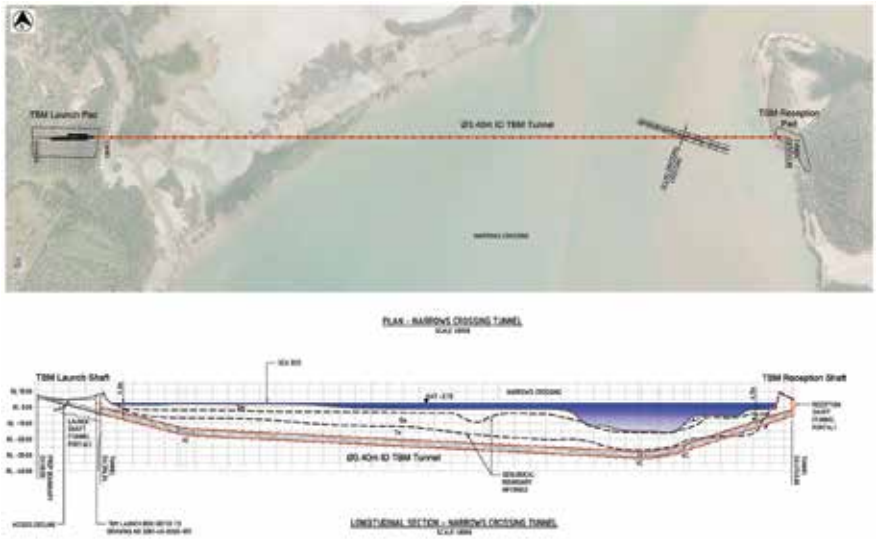

Figure 1:

Trenchless Solution

To minimize the environmental effect of pipeline construction activities crossing this sensitive intertidal and marine area, a 4.35-km trenchless solution was preferred over traditional open-cut construction methodologies.

The final marine crossing method selected was a segmentally lined tunnel to be used as a conduit for the installation of the GLNG Gas Transmission Pipeline (Figure 1).

The Saipem project team developed a pipeline installation method by pushing the 42-inch concrete coated pipeline (API 5L X70, thickness 23.5mm) into the tunnel using a pipe thruster machine (PTM) located on the mainland.

The pipeline was installed inside the tunnel that was previously partially flooded with seawater. Flooding of tunnel facilitated pipeline installation by a significant reduction of the pipe self-weight and consequently of the friction loads acting on the concrete lining invert. The pipeline was concrete weight coated (CWC) to avoid buoyancy in the operating condition.

Once the pipeline installation was com-

Figure 2:

plete, the tunnel was sealed with end plugs and entirely filled with seawater to ensure it remained inaccessible over the 42- year design service life of the project.

The Narrows marine crossing tunnel alignment was 4,350 meters long, with a minimum coverage of 12.5 meters. The excavation was performed using a continuous, segmental lining earth pressure balance tunnel boring machine (TBM), with an internal diameter of 3,400 mm and a cutter-head diameter of 4,060 mm (Figure 2).

A 360-meter-long and 8-meter-wide launch shaft with a decline ramp (2.5% inclination) was constructed on the mainland in order to assemble and launch the TBM and finally to install the pipeline. Shaft walls were supported by anchored/propped sheet piles.

A receiver shaft (15 by 8 meters) was built on Curtis Island to allow for TBM recovery and pipeline connection tie-ins to the route section on the island.

The TBM was assembled and launched at the end of April 2013, while the breakthrough was in early February 2014. The actual excavation rate was about 16-18 meters a day, with a volume of about 55,000m3 of total excavated spoil.

Tunneling operations were performed by a 75 member team, working more than 420,000 man-hours.

A dedicated railway was constructed in the tunnel to transport spoil, concrete segments, material and personnel to and from the TBM.

The TBM was equipped with a guidance system based on a laser theodolite mounted on the tunnel lining. The TBM advancement and the tunnel alignment were checked in real time with accuracy to the millimeter. The actual misalignment at the arrival target was less than 15 mm.

The tunnel alignment was designed to minimize the construction risks with reference to the complex geological conditions expected, such as mixed soil conditions with sandy clay, gravel and mudstone.

A critical section was anticipated in the second half of the tunnel alignment where regional faults were encountered, resulting in abnormal conditions into the TBM excavation chamber: excessive high-pressure water inflows, unstable tunnel face within thick gravel layers, etc. The flexible capabilities of the adopted EPB-TBM and the dedicated tunneling procedures allowed good boring performances even in the challenging, complex and unstable soil conditions encountered.

Once completed the boring activities, tunnel commissioning and preliminary preparatory works for the pipeline installation were performed in about six weeks.

Tunnel Installation

The first step was the TBM disassembly and removal from the receiver shaft on Curtis Island. Afterward, several activities were performed to prepare the tunnel for pipeline installation, including preparation of an as-built survey, removal of the temporary services, dismantling of the railway, installation of FOC, cleaning and smoothing of the tunnel invert, and flooding of the tunnel with seawater.

Finally, the launch shaft was rearranged for the pipeline installation activities, such as pipe rollerway setup, PTM settling and power pack/control cabin allocation, and pipe braking system installation. The pipeline installation inside the tunnel was performed using the hydraulic (PTM equipment (Herrenknecht Model HK750), installed in proximity of the tunnel portal. The PTM was to clamp the 42-inch CWC pipeline and apply a push/pull force up to 750 tons. The installation advancement rate was about 5 meter/7minutes for every thrusting cycle (Figure 3).

In addition, between the tunnel portal and the PTM, a braking system made up of a clamp mounted on a steel supporting frame was installed to avoid uncontrolled movements of the pipeline string when the thruster clamp was in open mode. The PTM and the braking system clamps were automatically activated and coordinated through a hydraulic circuit controlled by an operator in a control cabin.

The major advantages of using a PTM over traditional installation equipment (winch/linear winch), are:

- Safe installation: The risk of uncontrolled pipe string movements during installation is minimized. The PTM clamp and braking system clamp allow for a better and continuous control of the pipeline string. No objects under tension required.
- Contingency measures: PTM could possibly be used even to pull back the pipeline string already installed in the tunnel in case critical problems arise.
- Pipeline stress reduction: Pipeline rotation is minimized during installation.
- Minimization of construction risks: The risk of pipeline derailment out of the rollerway is significantly reduced due to the clamping action of the pipe thruster/brake system.
- Schedule optimization: The overall

Figure 3


Figure 4


Figure 5

complexity of the installation system is minimized All installation activities were performed on the mainland minimizing logistical and construction related issues on the island.

The abrasion and the frictional interaction between the 42-inch CWC pipeline and the concrete segmentally lined tunnel invert was minimized by installing high-performance polyurethane collars around the pipeline, (Figure 4). This solution was specially designed and manufactured by the Saipem project team.

Intensive laboratory and full-scale testing on the polyurethane collars were performed in order to assess the mechanical performances of the proposed elastomer mixture. The selected prepolymer showed excellent mechanical properties with high resilience to stress concentration and abrasion resistance. During tunneling, to optimize the pipeline installation schedule, the 42-inch CWC single pipes were welded in the launch pad yard into triple joint pipe strings, each about 37 meters long and weighing 47 tons.

The pipeline string feeding the PTM was laid on the rollerway located along the launch shaft decline ramp and aligned with the tunnel centerline. The rollerway length was about the same as the launch shaft decline ramp, 300 meters (Figure 5). The adopted pipeline installation sequence along the launch shaft was conceptually similar to a pipeline firing line of an offshore pipelay vessel.

Along the rollerway, in the shallower section of the launch shaft, different working stations were accommodated along every triple joint length of pipe: three PASSO semi-automatic welding stations, one NDT station, one field joint coating station and one joint infill station.

The pipeline installation was performed by a cyclic two-phase work sequence:

- Phase 1: Triple joint pipe strings installed on the rollerway — Three 42-inch CWC-triple joint pipe strings were laid in sequence on the rollerway using a 250 ton crane positioned on top of the launch shaft (each CWC weighed about 1.3 ton/meter.
  The semi-automatic welding stations located in the shaft sequentially proceeded fitting and joining the triple joints to the 42-inch CWC pipeline string already laid on the rollerway. In the same time frame, the other working stations were performing the other activities on the pipe joints in running order, such as NDT and field joint coating.
- Phase 2: Pipeline entering tunnel – The PTM started to push the 42-inch CWC pipeline string into the flooded tunnel for a length equal to three triple joints.

Each phase required about 90 minutes to complete.

The work sequence restarted cyclically; when Phase 1 was completed, Phase 2 activities began. The installation production rate of a single working cycle was 115 meters/3 hours.

Critical engineering aspects of the proposed pipeline installation method have been duly addressed during the detail design phase. The following required finite element modeling: pipeline potential buckling during installation, pipeline stress analysis during installation and operational phase, interaction CWC pipeline/tunnel lining, interaction CWC pipeline/rollerway and evaluation of installation loads.


Figure 6

Dedicated full-scale tests have been performed to check interaction of CWC pipe/PTM clamps, anti-abrasion collars performances, CWC cutback infill with rapid set concrete and interaction of CWC pipeline/rollerway.

Installation of the 42-inch pipeline into the 4,350 meter-long tunnel was successfully performed in 15 days, with crew working 24-hour shifts (Figure 6).

Dedicated H&S risk workshops (Design HAZID, Construction HAZID, Safety in Design) were held jointly. As a result of the health and safety approach adopted, the pipeline installation involving about 150 workers for a total of about 150,000 man-hours, did not record a single lost time incident or near miss event.

Completion of the Narrows Marine Crossing was achieved in June and included pipeline pre-commissioning, sealing of the tunnel with concrete end plugs, installation of CP system, pipeline installation within transition zones at both ends of the tunnel, tie-ins, backfilling and final reinstatement.

The pipeline installation works were carried out in compliance with Australian and international standards. All the activities were certified by a strict QA/QC inspection project test plan.

The GTP installation has been completed in line with design expectations. In particular, no significant unforeseen event has been recorded, and all the design parameters monitored during installation were in line with the engineering models developed. The maximum actual resisting force measured at the PTM was 270 ton vs. an expected value of 350 ton. The results are ultimately coherent with the factor of safety assumed.

A dedicated full-scale validation test has been carried out in the PTM's manufacturer's factory. Moreover, in accordance with the case history investigated, the GTP installation is the longest to date ever performed using a Pipe Thruster Machine – 4,350 meters.

In the light of the result achieved, the adopted installation concept might be further developed for more demanding scenarios, such as bigger pipeline diameters and longer tunnel lengths. ***P&GJ***

Acknowledgement:
The authors want to acknowledge G. Lanza; A. Napolitano and V. Renzoni for their strong contribute to the success of the project.

EIA: Gulf of Mexico Production to Increase through 2016

Because of the long timelines associated with Gulf of Mexico projects, the recent downturn in oil prices is expected to have little direct impact on GOM crude oil production through 2016. EIA projects GOM production to reach 1.52 MMbpd in 2015 and 1.61 MMbpd in 2016, or about 16% and 17% of total U.S. crude oil production in those two years, respectively.

The forecasted production growth is driven both by new projects and the redevelopment and expansion of older producing fields. Five deepwater projects began in the last three months of 2014: Stone Energy-operated Cardamom Deep and Cardona projects, Chevron-operated Jack/St. Malo fields, Murphy Oil-operated Dalmatian, and Hess-operated Tubular Bells.

Also taking place at the end of 2014 was the redevelopment of Mars (Mars B) and Na Kika (Na Kika Phase 3), both of which are mature fields. Cardamom Deep, Jack/St. Malo and Tubular Bells were scheduled for a late 2014 start-up, as well. Although announced to have begun production, production data have not yet been reported to the Bureau of Safety and Environmental Enforcement (BSEE).

The relatively high number of fields that came online in 2014 and are scheduled for 2015 and 2016 start-ups reflects the revival of interest in the GOM following the moratorium on deepwater drilling after the 2010 *Deepwater Horizon* incident. The moratorium lasted from April 30 to October 12, 2010, but there were still relatively few field start-ups in 2011 through 2013.

Thirteen fields are expected to start up in the next two years, eight in 2015 and five in 2016. Development of offshore fields requires both surface and subsea production equipment. The high cost of surface structures limits their use to large fields. Those fields with reserves not large enough to justify the necessary capital expenditure, use subsea infrastructure to connect to nearby existing platforms.

This approach, known as a subsea tieback, can reduce project costs and start-up times. More than half of the projects starting up in 2015 and 2016 will be subsea tiebacks to existing production platforms. These new projects, combined with continuing production from the developments brought online in late 2014, are forecast to add 265,000 bpd by the end of 2015. The production estimates for 2015 and 2016 include adjustments to account for seasonal shut-ins from hurricanes.

The current low oil price adds uncertainty to the timelines of deepwater GOM projects, with projects in early development stages exposed to the greatest risk of delay. In an effort to reduce this risk, producers are collaborating to develop projects more cost-effectively, to shorten the time to final investment decision and first production, and by sharing development costs. For instance, Chevron, BP, and ConocoPhillips recently announced a collaborative effort to explore and appraise 24 jointly held offshore leases in the northwest portion of the Gulf of Mexico's Keathley Canyon. ***P&GJ***

Anticipated deepwater Gulf of Mexico projects (2015-16)

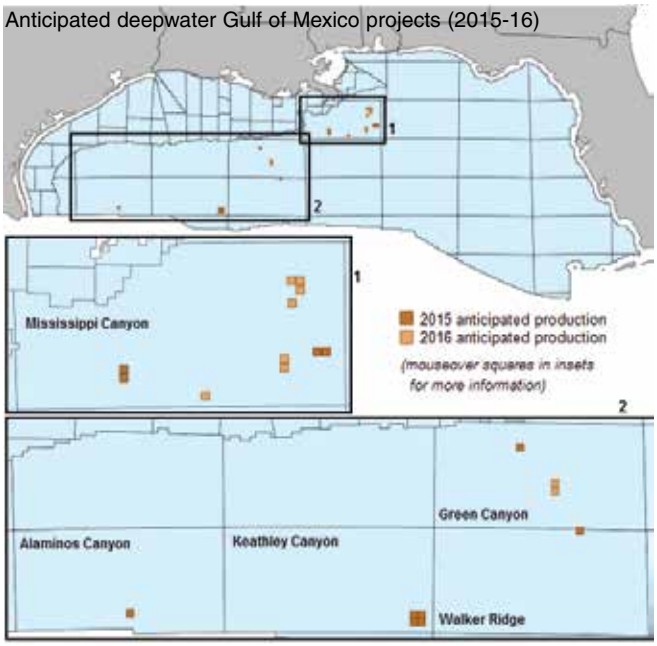

U.S. deepwater Gulf of Mexico field start-ups (2000-2016)
number of fields started

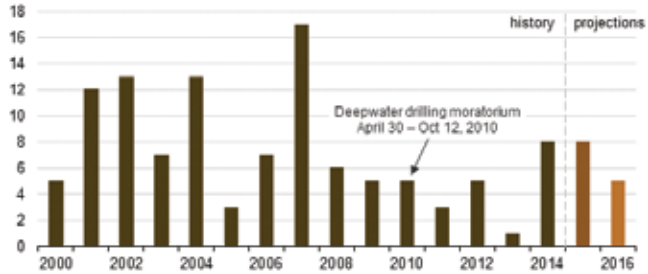

Source: *Energy Information Administration*

Monthly oil production from U.S. federal Gulf of Mexico (2010-16)
million barrels per day

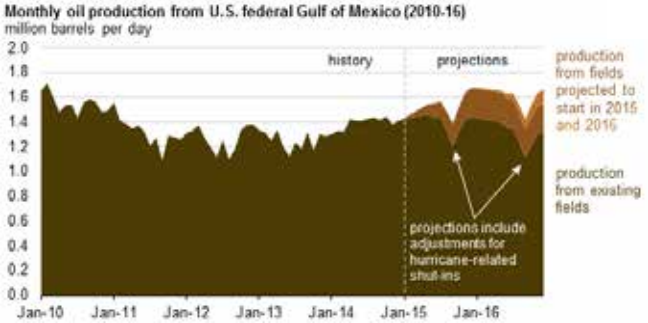

Source: *Energy Information Administration*

Keathley Canyon Connector Serving Ultra-Deep Gulf Waters

Williams, through its general partner ownership of Williams Partners, announced with DCP Midstream Partners, LP that the extended Discovery natural gas gathering pipeline system began flowing natural gas in early February.

The Keathley Canyon Connector deepwater gas gathering pipeline system and the South Timbalier Block 283 junction platform are serving producers in the central ultra-deepwater Gulf of Mexico.

Allseas installed the pipeline in water depths of up to 7,200 feet about 300 miles southwest of New Orleans, along with multiple inline structures and a dual hub pipeline end termination (PLET) that was a third-party design fabricated by Saipem.

The 20-inch, 209-mile Keathley Canyon Connector, which is capable of gathering more than 400 MMcf/d, originates in the southeast portion of the Keathley Canyon protraction area and terminates into Discovery's 30-inch mainline at Discovery's new junction platform.

"Building a pipeline in challenging terrain at this depth is incredibly complex, and I applaud our project team for their commitment to completing the project in a safe, environmentally responsible and timely manner," said Rory Miller, senior vice president of Williams' Atlantic-Gulf operating area. "True to our vision of developing smart, large-scale solutions to move gas to market, we've built a highly reliable and cost-effective connection from deepwater production to our onshore Larose gas processing plant and Paradis fractionator."

The extension is supported by long-term agreements with the Lucius and Hadrian South owners, as well as the Heidelberg and Hadrian North owners, for natural gas gathering, transportation and processing services for production from those fields. In addition, the new pipeline system is in proximity to other high-potential deepwater Gulf of Mexico discoveries and prospects.

"With the startup of the Keathley Canyon pipeline the Discovery joint venture is now ready to serve the growing production needs of our

deepwater producers. As partners in the project, Williams and DPM are now positioned to significantly benefit from its world class deepwater gathering system," said Bill Waldheim, President of DCP Midstream Partners.

In addition to the offshore gathering system, the Discovery system includes the 600 MMcf/d Larose natural gas processing plant. ***P&GJ***

Chevron Sanctions Stampede Project in Deepwater U.S. Gulf of Mexico

Chevron Corporation's subsidiary, Union Oil Company of California, has reached a final investment decision to develop the Hess Corporation-operated Stampede project in the deepwater U.S. Gulf of Mexico. Stampede is a deepwater subsea development, which will be tied-back to a newly constructed tension leg platform (TLP).

Houston-based Wood Group Mustang was awarded the front-end engineering design (FEED) services contract for the project to be located in 3,500 feet of water in the Gulf of Mexico. Modec International won the contract for engineering, procurement and construction (EPC) management services for the hull and the mooring system of the Stampede TLP.

The TLP, with dry topsides weight of 11,500 tons, is being designed to produce 80,000 bpd of oil, 60,000 bpd of water and 120 MMscf/d of gas at capacity.

The planned drilling program includes six production and four water injection wells. Drilling is scheduled to begin in the fourth quarter with production expected in 2018.

The Stampede field has estimated recoverable resources in excess of 300 MMboe, and the Chevron subsidiary has a 25% working interest in the development. Other co-owners are Hess Corporation (operator and 25%), Statoil (25%) and Nexen (25%).

The $6 billion project includes joint development of the Knotty Head and the Pony discoveries in Green Canyon Blocks 511, 512 and 468. The blocks are located 220 miles southeast of New Orleans in 3,500 feet of water, and target lower Miocene reservoirs at 30,000 feet. The Knotty Head field was discovered in 2005; the Pony field was discovered in 2006.

"This investment decision confirms Chevron's commitment to strategically grow our business in the deepwater by adding

long-term development opportunities that will deliver value to shareholders," said George Kirkland, vice chairman and executive vice president, Upstream, Chevron.

Enbridge Inc. announced it will build, own and operate a crude oil pipeline in the Gulf of Mexico to connect the planned Stampede development to an existing third-party pipeline system. The 16-mile, 18-inch lateral is expected to cost $130 million and be operational in 2018. ***P&GJ***

Various Concepts Of Pipe-in-Pipe Design and Fabrication

By **JC Suman, Owner, Energy Transport & Infrastructure, LLC,** Richmond, TX

Pipe-in-pipe (PIP) is a pipeline design concept that minimizes heat loss from the fluids being transported. Engineers resort to this method when alternative methods of insulating a pipeline can't meet the design's heat loss criteria, particularly in deep water developments.

Maintaining heat is necessary for flow assurance and other operational considerations. PIP is a special type of fabricated pipeline with two concentric pipes with insulating material contained within the annuli.

The inner pipe, which carries the fluids is known as "carrier pipe," while the outer pipe is called the "jacket." The design has evolved in recent years and consists of several design and fabrication methodologies. PIP design, as well as fabrication, and installation requires special considerations depending on the type considered.

Design, Fabrication Methodologies

Engineering design of PIP is no different than an ordinary subsea pipeline. The same principles of mechanical design still apply. Generally, the jacket is designed for lay stresses, even though the fixed type segments require composite section geometric properties for proper analysis. The hydrodynamic stability calculations are almost entirely based on the geometric properties of the composite section.

Stress distribution at the joints of the jacket pipe and the carrier pipe in the case of a fixed type PIP segment is complex and generally a finite element method (FEA) model is required to analyze stresses.

There are a number of options available for fabricating a PIP pipeline segment. The fabrication method used for a PIP segment differentiates the pipeline more so than the design methodology. There are essentially three main types of PIP segments based on fabrication method used: fixed, sliding and restrained. They refer to the movement of the carrier pipe with respect to the jacket pipe.

In this type of segment, there is no movement between the carrier pipe and the jacket pipe, which are connected at the ends either by welding donut rings/bulkheads or forged tulips. This aligns the two pipes axially and fixes them in all three directions for rotation as well as for translation. Since the two pipes are connected at the ends, each pipeline segment is like a sealed cylinder. Therefore, can allow a vacuum in the annulus for insulation.

Custom-designed components in this method PIP design consist of a pipeline segment fabricated with two concentric pipes of two different diameters, which are separated by two donut rings at the ends, creating an annulus. The annulus is filled with an insulating material, its size determined by the insulation requirements as established by flow assurance requirements for the project.

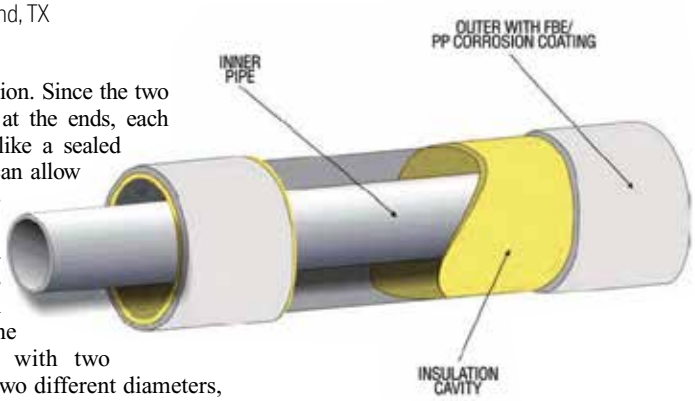

Longitudinal view of a typical PIP segment.
Courtesy of JP Kenny

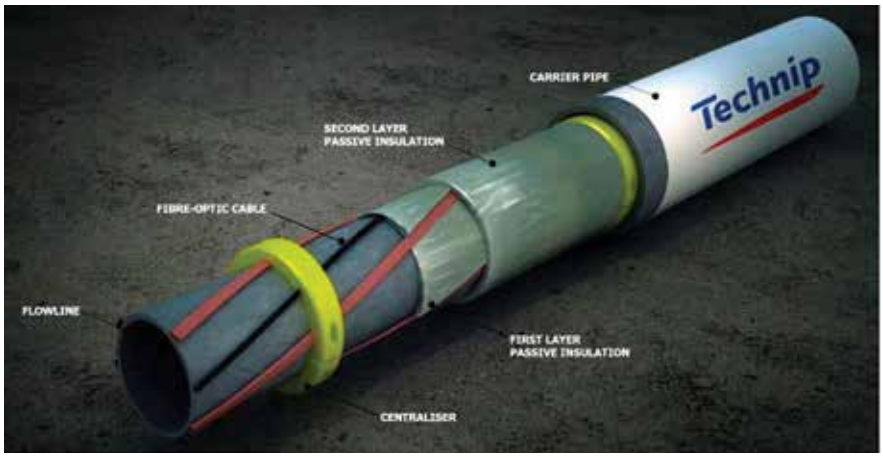

PIP-segment (active heating) fabrication sequence.
Courtesy of Deep Sea Subsea Systems

The segments are joined on the lay vessel by welding the inner pipe (carrier) ends. Portion of carrier pipe between the two welded segments does not have jacket protection until after the welding is completed for connecting two carrier pipes of the two adjoining segments. This is essentially a custom design for every scope and each project. The sizes of the carrier and jacket pipe are sized to fit the criteria of each project.

The joint between the two segments, known as a "field joint," can be handled in various ways, the simplest being with wet insulation applied and then covered with insulated wrap. Since the two pipes are connected at the ends using metallic centralizing donut rings/bulkheads, each pipeline segment is like a sealed cylinder. Therefore, it can permit a vacuum in the annulus for insulation, if required. There will be some heat loss from the carrier pipe (flowline) to jacket pipe through the metallic centralizing donut rings/bulkheads.

The behavior of this type of PIP at the joints is complex. Therefore, generally a finite element analysis is performed to ascertain stresses in the bulkhead and the pipes during the pipe lay as well as for thermal loads under operational conditions. This PIP system can be installed by S-lay and J-lay methods. Reel lay should be avoided, because of the complicated stress distribution at the joints and the strong possibility of creating torsional and fatigue stresses in the carrier pipe.

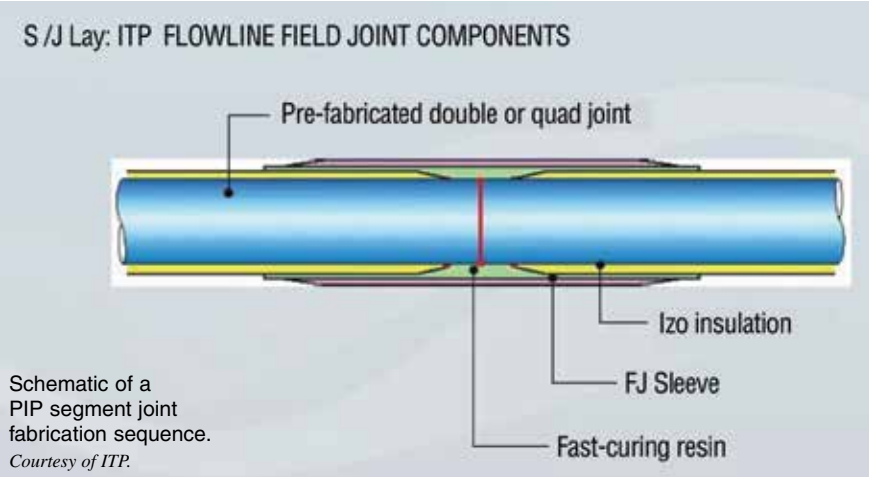

Schematic of a PIP segment joint fabrication sequence.
Courtesy of ITP.

Fabrication of this type of PIP joints is accomplished with swaged connectors or forged tulips and is much easier than using the donut rings. In the case of swaged and tulip type ends, both are initially welded to the jacket pipe, then welded to the outer surface of the carrier pipe. This is done at both ends of the joint.

In a restrained type of fabrication of PIP segments, polymer bulkheads are used to hold insulation material in place and to the two pipes coaxially aligned. These bulkheads transfer the load during installation and provide concentric alignment, but are not attached to the jacket pipe. The flowline is concentrically located inside the jacket pipe by spacers in the main body of the joint and by non-metallic bulkheads at both ends.

The bulkheads provide axial and lateral concentricity between the flowline and carrier pipe during installation. However, it does allow some axial movement of the flowline with respect to the jacket pipe during lay operation. The insulation material is either pre-attached to the flowline prior to insertion into the jacket pipe or the annulus is filled once the flow line has been inserted inside the jacket pipe.

The field joint is usually done by welding steel half shells to close the gap between consecutive joints, and using foam or other insulating material to fill the space. Installation of restrained PIP systems can be accomplished essentially using Reel lay; S-lay or J-lay. For Reel-lay, it is advisable to keep the outer and inner surface of the bulkheads rounded and smooth, so as to keep the resistance to movements of the flowline with respect to the jacket pipe during the lay operation to a minimum.

In this type of fabrication, the flow line is free to move inside the jacket pipe. The jacket pipe is joined by a butt weld to attach each segment to the next segment and thus allowing the jacket pipe to slide freely over the flowline. Alignment spacers are generally used to keep the outer jacket pipe and the flowline pipe aligned.

A temporary device may have to be used to keep the flowline and the jacket pipe aligned during transportation, handling and laying operation. This device is removed prior to welding. Thermal insulation may be the outer most layer if flow-through-annulus active heating is used. Since this can be installed using Jay-Lay, S-Lay of Reel-Lay, any vessels available and consistent with the pipeline diameter and water depth can be used.

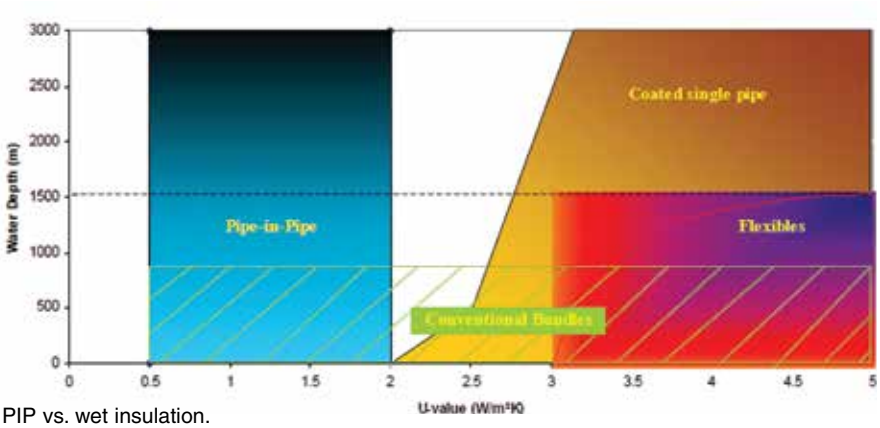

PIP vs. wet insulation.
Courtesy of Deep Sea Subsea Systems

Field Joint Options

In an S-lay a PIP system is typically welded on the lay vessel with half shells used at the end of each joint to cover the carrier pipe insulation, which could be wet type, foam or equivalent.

An alternative PIP insulation system for S-lay installation is offered by fabricator ITP. The insulation is provided by Microtherm® (Izoflex®). This material is strapped onto the flowline prior to insertion into the jacket pipe. The jacket pipe is then swaged down onto the flowline and welded at the end of every pipe joint. This effectively creates a bonded system, and the field joint is completed by sliding a steel sleeve over the joint and bonding in place.

For a reeled system, the pipeline is fabricated onshore, and the requirement for field joints is reduced as typically the pipe in pipe system allows axial sliding of the flowline within the sleeve. Such a sliding system allows the flowline and sleeve to be welded separately, before the insulated flowline is inserted into the sleeve pipe.

The pipe in pipe flowline is then stored at the spool-base in long stalks prior to final joining of the stalks as the pipeline is reeled onto the installation vessel. It may require field joints with half shells between stalks, or it may be possible to weld the flowline and then slide the sleeve along and weld the sleeve without requiring half shells.

Insulation Of Segments

Insulation is an important part of the PIP segment. Since, effective and efficient functioning of the insulation is of paramount importance in order for the system to work and achieve the objective of mitigating heat loss from the flowline/carrier pipe.

Selection process of pipe-in-pipe insulation systems is most times designer and fabricator dependent and can be complex. And therefore, no recommendations are given here for any particular system. Instead it is recommended to examine the properties of various insulating materials available, and to consider the generic system designs suitable the type of PIP desired.

Polyurethane Foam (PUF) systems are assembled in standard joint lengths by first centralizing the flow-line pipe inside the carrier pipe, sealing the annular gap, then injecting the reactants plus blowing agent into the annulus. The PUF expands and cures, bonding to the inner and outer pipes in the process. PUFs can be blown at low densities (110kg/m3) and provide extremely low conductivity (0.03 Wm-2K-1).

Dry-wet insulation, or Vikotherm, which is manufactured by Trelleborg Technologies of Norway comes in two types of high-performance insulation and may eliminate the need for PIP requirements in some cases:

- Vikotherm-R2 is a three-layer coating system capable of operating at -45° C to

+155° C and at depths of 3000-plus meter.

- Vikotherm-S1 is based on non-syntactic silicone technology and has an operational range of -40° C to +135° C and depths up to 3000 meters.

Granular materials, or microspheres, can be poured into the annular space between the flowline and jacket pipe. The granules are usually alumina-silicate microspheres, or fly ash, a waste product from coal-fired power plants. These microspheres range from 10 to 150 mm in diameter. This material is inert and can be used without any reservation in the annuli of the PIP segments.

Thermal conductivity of microspheres is between 0.09 and 0.11 W/m2K. The pipe assembly can consist of single or double joints. During the application of this insulation, the segments are normally inclined at an angle to receive the material and then vibrated to ensure optimum compaction.

Microporous silica materials are ultralow density solids formed from a gel in which the liquid components are displaced by a gas to produce an aerogel. Aerogels are, in effect, a silica foam with pore spaces smaller than the mean free path between air molecules. The fact that the pores are so small gives the material exceptionally low density and thermal conductivity. Aspen Aerogels, Cabot and Microtherm are some of the manufacturers of these materials. These insulating materials have been used by installation contractors, including Subsea 7 and Technip.

Mineral wool is a form of spun silica manufactured from molten rock spun at temperatures as high as 1600° C into interlocking fibers. The main supplier of mineral wool products for subsea pipeline insulation applications in the North Sea is Rockwool.

Rockwool Aquaduct CL product is designed for pipe-in-pipe applications. The material is manufactured with radially orientated fibers when installed, which provide compression resistance at low thicknesses (down to 10mm). It is supplied in pre-formed sheets (with a "C" shaped cross section) with a bonded aluminum foil outer facing to reduce radiation heat transfer in the annulus between the insulation and the carrier pipe.

A perfect vacuum is the best insulation possible. However, achieving this is difficult, since some gases under certain conditions are prone to diffusion through steel and can create partial pressures. This can cause conditions for corrosion of pipeline, as well have derogatory effects on the heat transfer coefficient. Vacuum can be combined with other type of insulation to achieve desired heat transfer coefficient.

The insulation system choice will depend on the installation/PIP contractor.

Table 1: Insulation and PIP segment type compatibility matrix.

PIP/INSULATION	Granular Material	Micro-porous Material	Phase Change Material	PUF (injected)	PUF	Vacuum
Fixed	Y	Y	Y	Y	Y	Y
Restrained	Y	Y	N	Y	Y	N
Sliding	N	Y	N	N	Y	N

Table 2: Compatibility of installation method and type of PIP segment

Installation method/ joint type	Fixed	Restrained	Sliding
S-lay	Y	Y/N	Y
J-lay	Y	Y	Y
Reel-lay	N	Y	Y

Installation Of PIP

PIP pipelines can be installed using three lay methodologies: reel-lay, S-Lay or J-lay:

- J-lay is the second slowest of the three pipe lay methods, but the speed of the installation depends on the number of welding stations, pipe diameter, water depth and pipe joint shape. It is similar to the S-lay, however, it is the least stressful pipe-lay method of the three. This is especially important when laying a PIP type joints. Minimum depth of water required for J-lay depends on the tower angle and size of pipe. In general, J-lay cannot be used for water depths less than 600 feet.
- The S-lay is the slowest of the three pipe lay methods. It subjects the line pipe to high stresses, as well as stress reversal within a short span of time. This is especially important when laying a PIP type joints as it can lead to fatigue stresses. An S-lay system is typically a bonded PUF system with no relative axial movement of flowline and sleeve. The insulated PIP joints are welded on the S-lay vessel, typically using half shells to complete the field joint of the sleeve.
- Reel-lay is the fastest of the three methods, but only useful for up to 16-inch outer diameter and Normal reel-lay can install as much as 24 km per day, depending on the pipe size, water depth, etc. The pipe ovality and flattening effects due to reeling are important issues, and should be given due consideration in the detailed engineering phase before finalizing the pipe lay method. The only problem is that while it may be safe to reel single pipe on to a reel without much impact on the pipe integrity, the effect of reeling on the fixed PIP sections cannot be easily ascertained.

In general, a reeled sliding PIP system will allow axial movement of the insulated flow-line relative to the sleeve and the flow-line is typically located within the sleeve by centralizers/spacers.

Repair, Heat Loss Strategies

Pressurizing inlet valves are recommended when there is possibility of gelling or waxing, in case of an insulation failure due to a damaged segment. Where it is possible, use pressure to dislodge gelled material and open the pipeline for operation and or repair.

Inlet valves are installed on the pipeline, for example, at 1 km intervals are close shut when the pipeline is installed. It is important to make sure these valves do not get damaged during pipeline installation and are upright during installation.

The pipeline system should be designed assuming that if one segment remains uninsulated, the allowable heat loss from the pipeline fluids stays well within the design criteria. This is only possible for fixed-type PIP segments, since each segment and its insulation are totally independent of the rest of the pipeline system.

Use of double pipeline loop with diverter mechanism is an expensive, but reliable solution to guard against unwanted shut ins. This essentially requires two pipe lines, each designed to carry all the produced fluids. The loop is designed with a mechanism to divert flow in either pipeline at will if one pipeline is damaged. This design is prone to slugging under normal operational conditions, since each pipeline carries essentially half the quantity of the fluid it is designed to carry.

Prefabricated clamps can only be used in

fixed PIP segments, and only if the damage is limited to the outer pipe/jacket and the insulation has not been damaged. The clamps have been in use in industry for a long time to control leakage in single pipe pipelines.

Replacing damaged segments completely is difficult and can only be done with fixed PIP segments. This will require pipeline system shut in, cleaning, drying and re-commissioning with revenue loss and added expense as the consequence. However, all this cost may seem small when compared with the cost of replacing an existing PIP pipeline system, especially if the field production has not peaked and the pipeline is long. The proposed operation and sequence is as follows:

- Shut in the pipeline system.
- Remove the field joints on both ends of the damaged segment, exposing the carrier pipe/flowline.
- Cut off and remove the damaged segment, replacing it with a new segment.
- Leave field joints exposed after the new PIP segment is in place, provided the amount of heat loss is acceptable.
- Re-commission the pipeline system as needed.
- Develop conclusions and recommendations.

Conclusions

PIP systems allow a range of advanced and highly efficient insulation materials to be used in achieving overall heat transfer coefficients of less than 1 W/m2K. These systems are important components of subsea developments where untreated well fluids may have to be transported large distances and wax and hydrate problems must be managed.

However, as a result of this insulation, thermal expansion challenges are increased and techniques, such as probabilistic analysis, upheaval buckling, snake lay and cooling spools are employed to mitigate high-expansion loads.

There is bending of the PIP joints in the S-lay, as well J-Lay. However, both sagbend and overbend stresses can be controlled by manipulating the tension, forward pushing of the vessel and use pf stinger type/geometry. However, there is no such freedom in reel-lay to control stresses while loading the pipe on the reels. The pipe must be bent to conform to the reel radius, and stay that way for many hours or perhaps days. This is unlike S-lay and J-lay stresses (both sagbend and overbend), which exist for a short time compared with the reel-lay. ***P&GJ***

Author: JC Suman *is an engineer and owner of Energy Transport & Infrastructure, LLC, a Richmond, TX-based consulting firm, specializing in construction and project management of pipelines, terminals and structures. Suman is an author of several technical papers that have appeared in ASCE, ASME, OMAE, Oil & Gas Journal and the Pipeline and Gas Journal.*

Chevron Begins Production from Deepwater Gulf Fields

Chevron began crude oil and natural gas production from the Jack and St. Malo fields in the deepwater U.S. Gulf of Mexico in December 2014. The fields, discovered in 2004 and 2003, respectively, are among the largest in the Gulf of Mexico.

The first development stage is expected to ramp up over the next several years to a 94,000 bpd of oil and 21 MMcf/d of natural gas. With a production life of more than 30 years, current technologies are anticipated to recover in excess of 500 MMboe. Successive development phases, which could employ enhanced recovery technologies, may enable substantially increased recovery at the fields.

"The Jack/St. Malo project delivers valuable new production and supports our plan to reach 3.1 MMbpd by 2017," said George Kirkland, vice chairman and executive vice president, Upstream, Chevron Corporation.

The fields are located within 25 miles of each other in about 7,000 feet of water in the Walker Ridge area, 280 miles south of New Orleans, LA. The fields were co-developed with subsea completions flowing back to a single host, semi-submersible floating production unit located between the fields. The facility is the largest of its kind in the Gulf of Mexico and has a production capacity of 170,000 bpd of oil and 42 MMcf/d of natural gas, with the potential for future expansion.

Crude oil from the facility is transported 140 miles to the Green Canyon 19 Platform via the Jack/St. Malo Oil Export Pipeline, and then onto refineries along the Gulf Coast. The pipeline is the first large-diameter, ultra-deepwater pipeline in the Walker Ridge area of the Lower Tertiary trend. The combination of extreme water depths, large diameter, high-pressure design and pipeline structures have set new milestones for the Gulf of Mexico.

The project, which was sanctioned in 2010, has delivered new technology applications, including the industry's largest seafloor boosting system and Chevron's first application of deepwater ocean bottom node seismic technology in the Gulf of Mexico, providing images of subsurface layers nearly 30,000 feet below the ocean floor.

Chevron, through its subsidiary, Chevron U.S.A. Inc., has a working interest of 50% in the Jack field, with co-owners Statoil (25%) and Maersk Oil (25%). Chevron, through its subsidiaries, Chevron U.S.A. Inc. and Union Oil Company of California, also holds a 51% working interest in the St. Malo field, with co-owners Petrobras (25%), Statoil (21.5%), ExxonMobil (1.25%) and Eni (1.25%).

The company also has a 40.6% ownership interest in the host facility, with co-owners Statoil (27.9%), Petrobras (15%), Maersk Oil (5%), ExxonMobil (10.75%) and Eni (0.75%). ***P&GJ***